NOTES: UNLESS OTHERWISE SPECIFIED

GENERAL NOTES:

1. DIMENSIONS AND TOLERANCES PER ASME Y14.5M-1994.
2. MATERIAL: ANY .50 INCH PLATE STOCK. ALUMINUM, STEEL, NYLON, ETC.

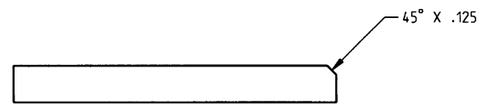

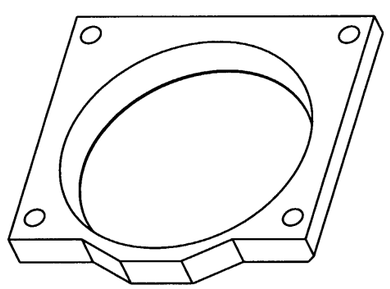

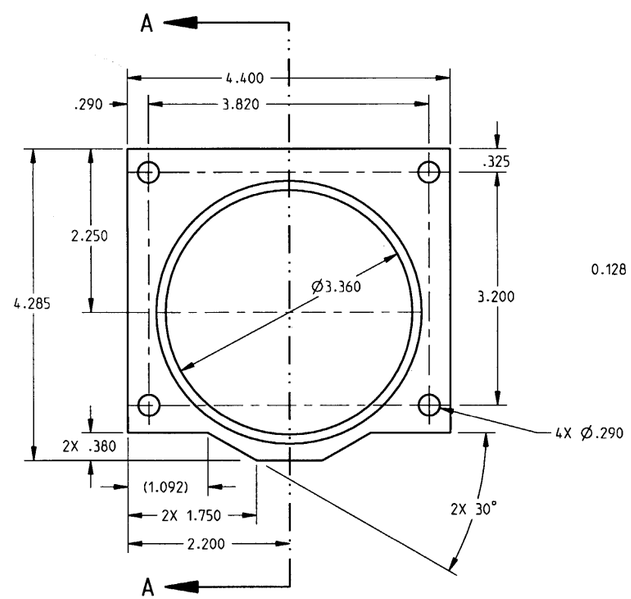

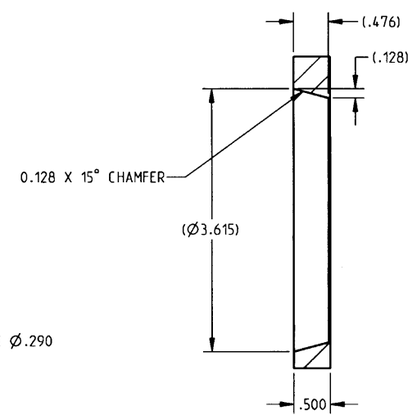

SECTION A-A